LAND USE HEARING OFFICER VARIANCE REPORT

APPLICATION NUMBER: VAR 22-0737	
LUHO HEARING DATE: May 23, 2022	**CASE REVIEWER:** Carla Shelton Knight

REQUEST: **The applicant is requesting a variance from the 30-foot Wetland Conservation Area setback requirement, Section 4.01.07B of the Land Development Code (LDC). The applicant's specific request, as shown on the site plan submitted on March 28, 2022, is to allow for the approval of an existing concrete patio, and the construction of a screen enclosure within the 30-foot Wetland Conservation Area setback.**

SUMMARY OF VARIANCE(S):

Wetland Setback

1) Per LDC Sec. 4.01.07.B.4, no filling, excavating or placement of permanent structures or other impervious surfaces shall be allowed within a required 30-foot wetland conservation area setback. The applicant requests approval for an existing concrete patio, and the construction of a screen enclosure within the 30-foot wetland conservation area setback. The applicant requests a 5-foot encroachment into the setback to allow for a remaining setback of 25 feet.

Findings

1) A wetland setback compensation planting plan has been provided on the site plan dated March 28, 2022, that provides equivalent square footage of compensation planting to the amount of encroachment. However, this encroachment is under the threshold of 500 square feet and is therefore exempt from the requirement for compensation planting.

2) There is an existing fence along the rear of the yard which is located within the 30-foot wetland setback area and which also requires a variance for placement in the wetland setback. The fence encroachment was not requested by the applicant but was noticed by the reviewer during the preparation of the staff report. The fence is therefore included in the request.

DISCLAIMER:

The variance listed above is based on the information provided in the application by the applicant. Additional variances may be needed after the site has applied for development permits. The granting of these variances does not obviate the applicant or property owner from attaining all additional required approvals including but not limited to: subdivision or site development approvals and building permit approvals.

Approval of this variance petition by Hillsborough County does not constitute a guarantee that the Environmental Protection Commission of Hillsborough County (EPC) approvals/permits necessary for the development as proposed will be issued, does not itself serve to justify any impact to wetlands, and does not grant any implied or vested environmental approvals.

Attachments: Site Plan

ADMINISTRATOR'S SIGN-OFF

Received
03-28-2022
Development
Services

DR NO.	REV.
1 OF 1	0

WETLAND SETBACK ENCROACHMENT PLANTING LEGEND

- ENCROACHMENT AREA
- COMPENSATION AREA
- 8 PROPOSED 3 GAL. WAX CORAL BEAN (ERYTHRINA HERBACEA)
- 7 PROPOSED 3 GAL. GALLBERRY (ILEX GLABRA)

NOTE: ALL SHRUB PLANTINGS WILL BE EVENLY SPACED ON A MAXIMUM OF 5 FOOT CENTERS

(265 SF TOTAL COMPENSATION)

VARIANCE REQUEST:
VARIANCE TO LDC SECTION LDC SECTION 4.01.07.B TO REDUCE THE REQUIRED CONSERVATION AREA SETBACK FROM 30' TO 25.0' (MIN.).

SITE DATA

FOLIO #': 018845.1058
SEC/TWP/RGE: 03/28/18
TOTAL LAND AREA: 0.258 ACRES
EXISTING ZONING: PD (71-0236)
EXISTING USE: SINGLE-FAMILY RESIDENTIAL

LEGAL DESCRIPTION:
LOT 29, BLOCK 1, LAKE MAGDALENE ARMS ESTATES SECTION 1, ACCORDING TO THE MAP OR PLAT THEREOF AS RECORDED IN PLAT BOOK 45, PAGE 40, PUBLIC RECORDS OF HILLSBOROUGH COUNTY, FLORIDA.

VERTICAL DATUM NOTE:
ELEVATIONS ARE BASED ON S.W.F.W.M.D. BENCHMARK "19744 A", ELEVATION 49.29 (NAVD88).

FLOODZONE NOTE:
PROPERTY SHOWN HEREON APPEARS TO BE LOCATED IN FLOOD ZONE "X" PER F.I.R.M. NO. 12057C 0205H DATED 8-28-08. THIS SURVEYOR MAKES NO GUARANTEES AS TO THE ACCURACY OF THE ABOVE INFORMATION. LOCAL F.E.M.A. AGENT SHOULD BE CONTACTED FOR VERIFICATION.

VICINITY MAP
N.T.S.

WETLAND SETBACK ENCROACHMENT COMPENSATION PLANTING REQUIREMENTS:

- THE AREA OF REQUIRED PLANTING WILL BE A MINIMUM 1:1 RATION FOR THE AREA OF ENCROACHMENT WHICH IS NOT EXEMPT. NO MORE THAN A 1:1 RATIO SHALL BE REQUIRED. ADDITIONAL COMPENSATION MAY BE PROPOSED.
- COMPENSATION PLANTINGS WILL CONSIST OF NATIVE SHRUBS WITH NO LESS THAN TWO SPECIES AND EACH SPECIES WILL COMPRISE NO LESS THAN 30% OF THE TOTAL NUMBER OF REQUIRED SHRUB PLANTINGS. SEE TABLE 1 FOR SUGGESTED SPECIES.
- ALL SHRUB PLANTINGS WILL BE EVENLY SPACED ON 5 FOOT CENTERS WITH A MINIMUM SIZE OF 3 GALLON OR #3 SIZE MATERIALS.
- PLANTINGS WILL BE LOCATED WITHIN ANY SUITABLE, OPEN AREAS OF THE REMAINING SETBACK ABUTTING THE AREA OF ENCROACHMENT OR IF THESE AREAS DO NOT EXIST, THE PLANTINGS MAY BE LOCATED WITHIN OR ADJACENT TO ANOTHER PORTION OF THE SITE'S WETLAND SETBACK. IF NO SUITABLE PLANTING AREAS EXIST ON SITE, A WETLAND AND /OR WETLAND SETBACK ENHANCEMENT PLAN, NUISANCE SPECIES CONTROL PROGRAM OR OTHER SUITABLE COMPENSATION ALTERNATIVE MAY BE PROPOSED.
- THE INSTALLATION OF A SUITABLE IRRIGATION SYSTEM IS RECOMMENDED TO ENSURE PLANT ESTABLISHMENT AND FULFILLMENT OF THE REQUIRED SURVIVAL CRITERIA.
- NATIVE TREE AND HERBACEOUS SPECIES MAY BE UTILIZED IN ADDITION TO THE REQUIRED SHRUB PLANTINGS TO ESTABLISH CANOPY OR GROUNDCOVER COMPONENTS IF DESIRED BY THE APPLICANT.

MONITORING REQUIREMENTS:
MONITORING OF PLANTED AREAS SHALL CONSIST OF THE FOLLOWING:

- A TIME-ZERO REPORT, LISTING SPECIES AND #S PLANTED, UPON COMPLETION OF THE PLANTINGS SHALL BE PROVIDED TO THE NATURAL RESOURCES SECTION OF PGMD NO LATER THAN 30 DAYS FOLLOWING PLANTING COMPLETION.
- TWO ANNUAL REPORTS THAT LIST SURVIVAL % PER SPECIES AND ANY REQUIRED REPLANTS SHALL BE PROVIDED TO THE NATURAL RESOURCES SECTION OF PGMD NO LATER THAN 30 DAYS FOLLOWING DATA COLLECTION.
- PLANTED SHRUB SPECIES MUST MAINTAIN A MINIMUM 85% SURVIVAL RATE WITH ANNUAL REPLANTING IF NEEDED. EXOTIC AND NUISANCE SPECIES (REFERENCE MOST CURRENT FLORIDA EXOTIC PEST PLAN COUNCIL LIST) COVER WITHIN THE PLANTING ZONES MUST BE MAINTAINED BELOW 10%.
- FOR NUISANCE SPECIES CONTROL PROGRAM AREAS, ALL EXOTIC AND NUISANCE SPECIES MUST BE REMOVED DURING THE INITIAL CONTROL EVENT(S) AND TOTAL NUISANCE SPECIES COVERAGE MUST BE MAINTAINED BELOW 10% FOR 2 YEARS THEREAFTER.

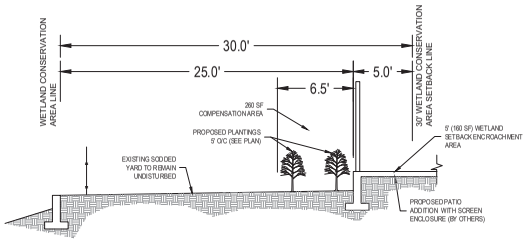

WETLAND SETBACK ENCROACHMENT SECTION
N.T.S.

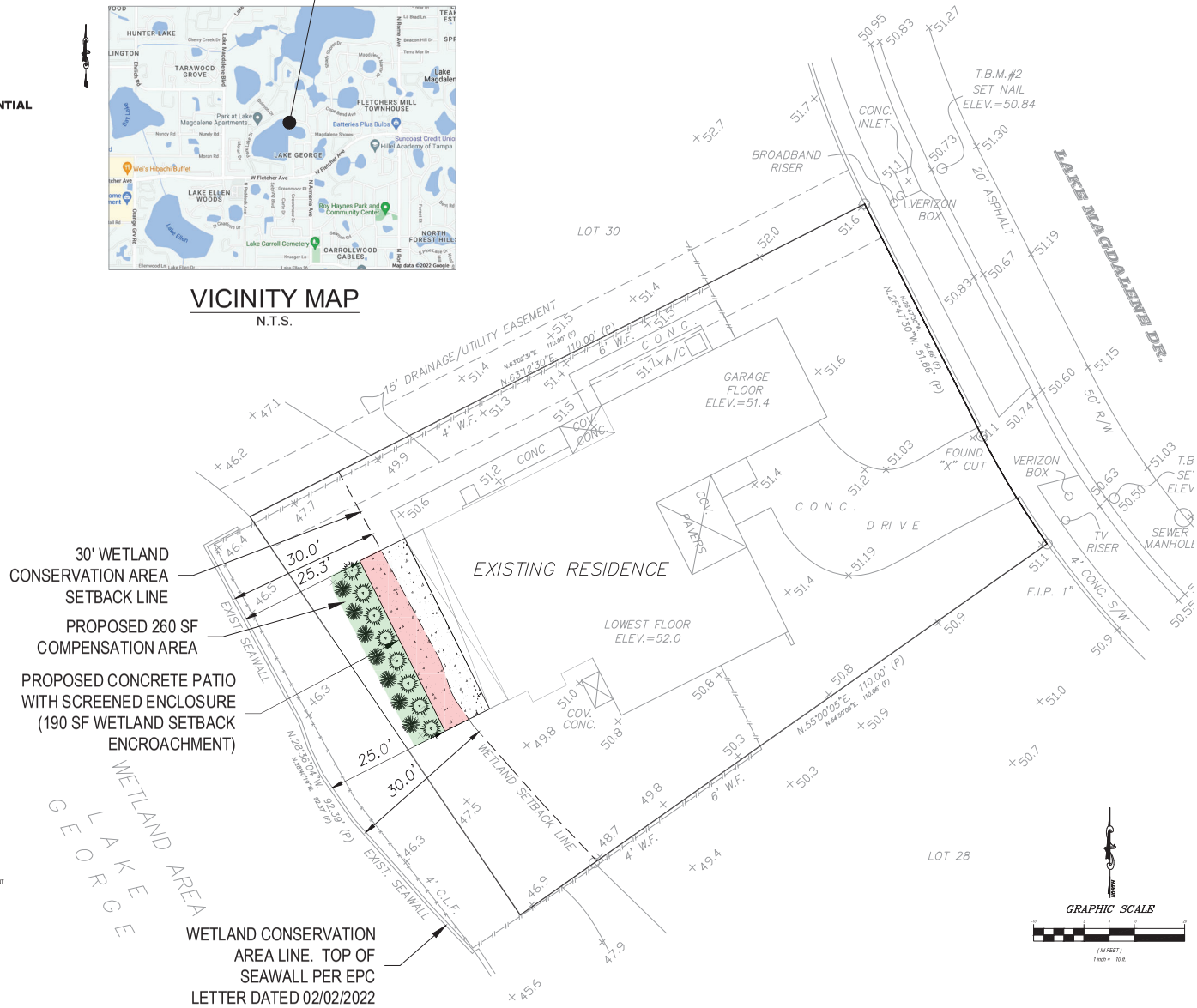

NO.	DATE	REVISION
0	02/23/22	ISSUED FOR REVIEW

OWNER:
MICHAEL & GLORIA MICHEAU
13518 LAKE MAGDALENE DRIVE
TAMPA, FL 33613

LANDSCAPE DESIGNER:
KENDALL ENV. SOLUTIONS, INC.
JASON KENDALL
1316 CORNER OAKS DRIVE
BRANDON, FL 33510
813-361-7378

PLANNER:
TSP COMPANIES, INC.
DAVID WRIGHT
PO BOX 1016
TAMPA, FL 33601
813-230-7473

PROJECT:
MICHEAU - WETLAND SETBACK VARIANCE
13518 LAKE MAGDALENE DRIVE
TAMPA, FL 33613

DRAWING TITLE:
SITE PLAN

DRAWING NO.:
1 OF 1

22-0737

Received
03-28-2022
Development
Services

HILLSBOROUGH COUNTY
PLANS REVIEWED FOR CODE COMPLIANCE
APPROVED
HCPLD-21-0009849 5/7/2021
THIS SET OF PLANS MUST BE KEPT ON THE JOB SITE AT ALL TIMES
IS UNLAWFUL TO MAKE CHANGES OR ALTERATIONS WITHOUT APPROVAL.
THE ISSUANCE OF THIS PERMIT SHALL NOT BE HELD TO PERMIT OR APPROVE THE VIOLATION OF ANY COUNTY, STATE OR FEDERAL LAW, CODE, OR REGULATION
Building - Peter Ortiz - Approved

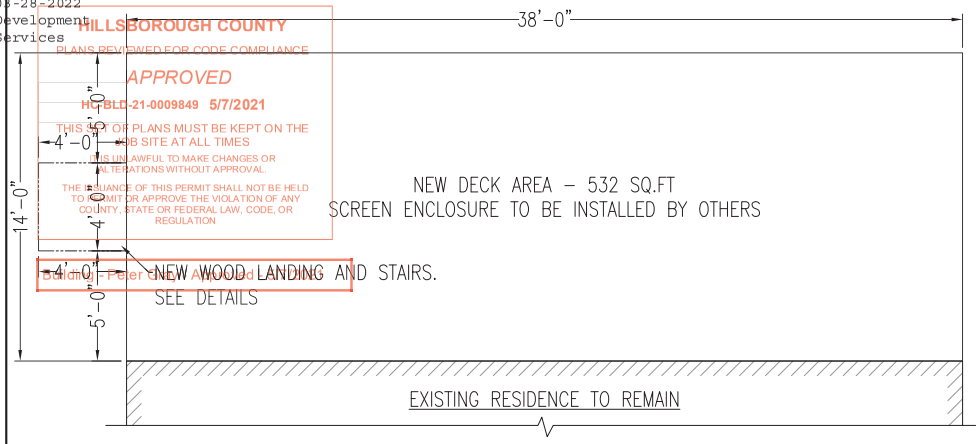

PROPOSED DECK FLOOR PLAN
SCALE: $\frac{1}{4}$"=1'-0"

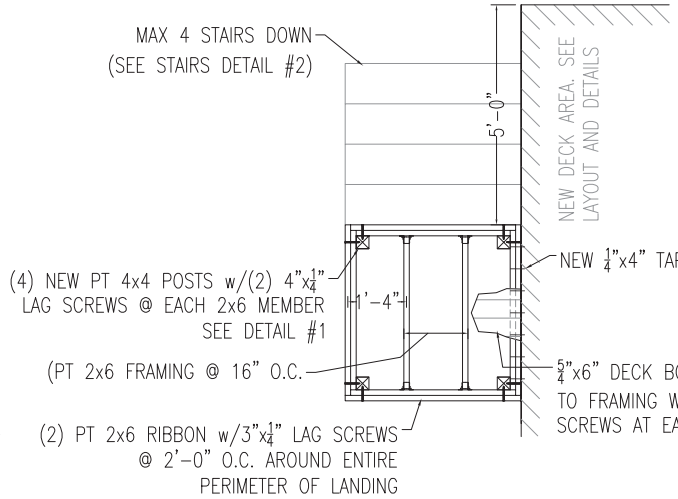

PROPOSED DECK LANDING FLOOR PLAN
SCALE: $\frac{1}{2}$"=1'-0"

THESE CONSTRUCTION DOCUMENTS HAVE BEEN PREPARED UNDER THE DIRECT SUPERVISION OF PIERRE M. VALLES, P.E. (FL #66356). PIERRE M. VALLES, HEREBY CERTIFIES THAT THESE DOCUMENTS COMPLY WITH ALL APPLICABLE SECTIONS OF THE FLORIDA BUILDING CODE 2020, 7TH EDITION.

PLANS SHALL REFERENCE COMPLIANCE WITH THE 2020, 7TH EDITION FLORIDA BUILDING CODE, RESIDENTIAL SECTION R301, DESIGN CRITERIA & ASCE 7-10

DATE

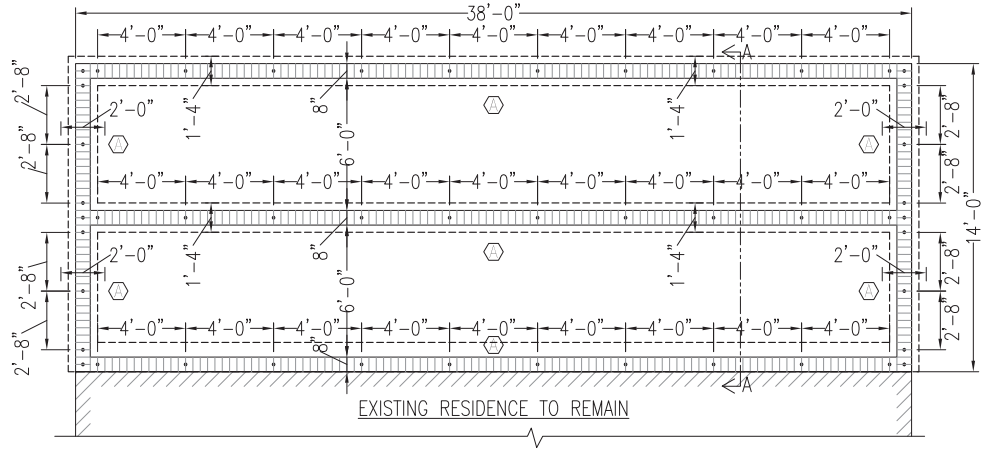

PROPOSED FOUNDATION PLAN
SCALE: $\frac{3}{4}$"=1'-0"

NOTE: VERIFY IN FIELD NUMBER OF STAIRS NEEDED.
MAX 4 STAIRS w/MAX 7$\frac{1}{2}$" RISERS

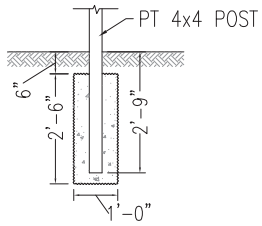

DETAIL #1 – POST FOOTING
SCALE: $\frac{1}{2}$"=1'-0"

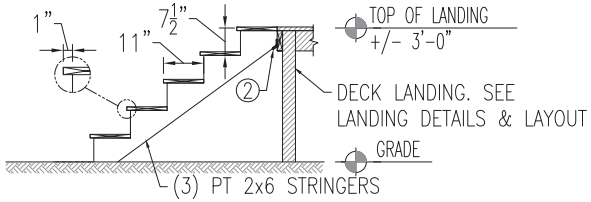

DETAIL #2 – STAIRS FOR LANDING
SCALE: $\frac{1}{2}$"=1'-0"

FOOTING SCHEDULE				
MARK	LENGTH	WIDTH	DEPTH	REINFORCING
A	CONT.	1'-4"	1'-0"	2 #5 CONT.

STRUCTURAL CONNECTOR SCHEDULE

MARK	MODEL	NUMBER REQUIRED	FASTENERS	UPLIFT	SHEAR F1	SHEAR F2	GRAVITY LOAD	SPECIAL NOTES	FL#
1	LUS28	1	6-10d	1165	--	--	--	HANGER	10655
2	LSCZ	1	16-10d	945	--	--	--	STRINGER CONNECTOR	10865

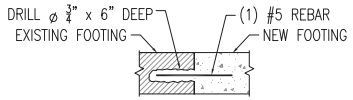

NEW TO EXISTING FOOTING

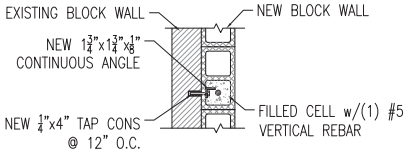

NEW TO EXISTING CMU

NEW TO EXISTING (PLAN VIEW)
SCALE: NTS

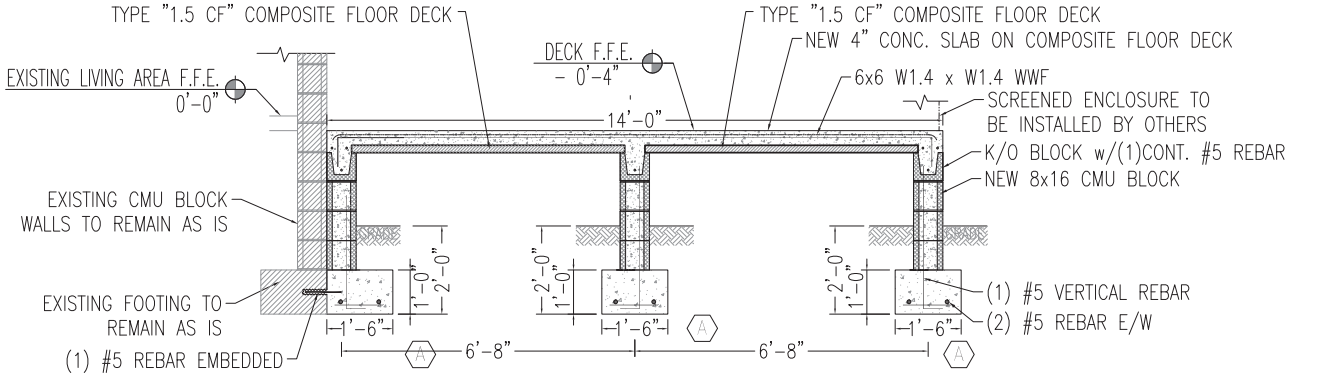

SECTION A–A
SCALE: $\frac{3}{4}$"=1'-0"

PLANS PREPARED BY:
LENA FINCH
(813)841-1241
REF JOB# 42001

PIERRE M. VALLES
P.E.FL #66356
5470 E. BUSH BLVD, SUITE #202
TAMPA, FL 33612
PHONE: (813)506-1431

PLANS PREPARED FOR:
MIKE AND ADAIR MICHEAU
13518 LAKE MAGDALENE DR.
TAMPA, FL 33613

REVISIONS
3-30-2021

DRAWN BY: LENA
CHECKED BY: PHIL
DATE: 1/5/2021
SCALE: NOTED
JOB NO.: REAR DECK
SHEET NAME: PROPOSED FLOOR & FOUNDATION PLAN
SHEET: S-1.0

Received
03-28-2022
Development
Services

HILLSBOROUGH COUNTY
PLANS REVIEWED FOR CODE COMPLIANCE
APPROVED
HC-BLD-21-0009849 5/7/2021
THIS SET OF PLANS MUST BE ON THE JOB SITE AT ALL TIMES
IT IS UNLAWFUL TO MAKE CHANGES OR ALTERATIONS WITHOUT APPROVAL
THE ISSUANCE OF THIS PERMIT SHALL NOT BE DEEMED TO PERMIT OR APPROVE THE VIOLATION OF ANY COUNTY, STATE OR FEDERAL LAW, CODE OR REGULATION

SECTION 3, TOWNSHIP 28 SOUTH, RANGE 18 EAST
HILLSBOROUGH COUNTY, FLORIDA

LEGAL DESCRIPTION:
LOT 29, BLOCK 1, LAKE MAGDALENE ARMS ESTATES SECTION 1, ACCORDING TO THE MAP OR PLAT THEREOF AS RECORDED IN PLAT BOOK 45, PAGE 40, PUBLIC RECORDS OF HILLSBOROUGH COUNTY, FLORIDA.

THESE CONSTRUCTION DOCUMENTS HAVE BEEN PREPARED UNDER THE DIRECT SUPERVISION OF PIERRE M. VALLES, P.E. (FL #66356). PIERRE M. VALLES, HEREBY CERTIFIES THAT THESE DOCUMENTS COMPLY WITH ALL APPLICABLE SECTIONS OF THE FLORIDA BUILDING CODE 2020, 7TH EDITION.

PLANS SHALL REFERENCE COMPLIANCE WITH THE 2020, 7TH EDITION FLORIDA BUILDING CODE, RESIDENTIAL SECTION R301, DESIGN CRITERIA & ASCE 7-10

DATE

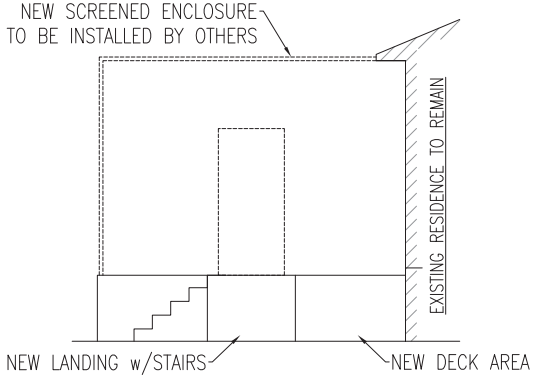

**SEE SHEET S1.0 FOR ALL OTHER DETAILS & ELEVATIONS

BASIC SIDE ELEVATION
SCALE: 1/4"=1'-0"

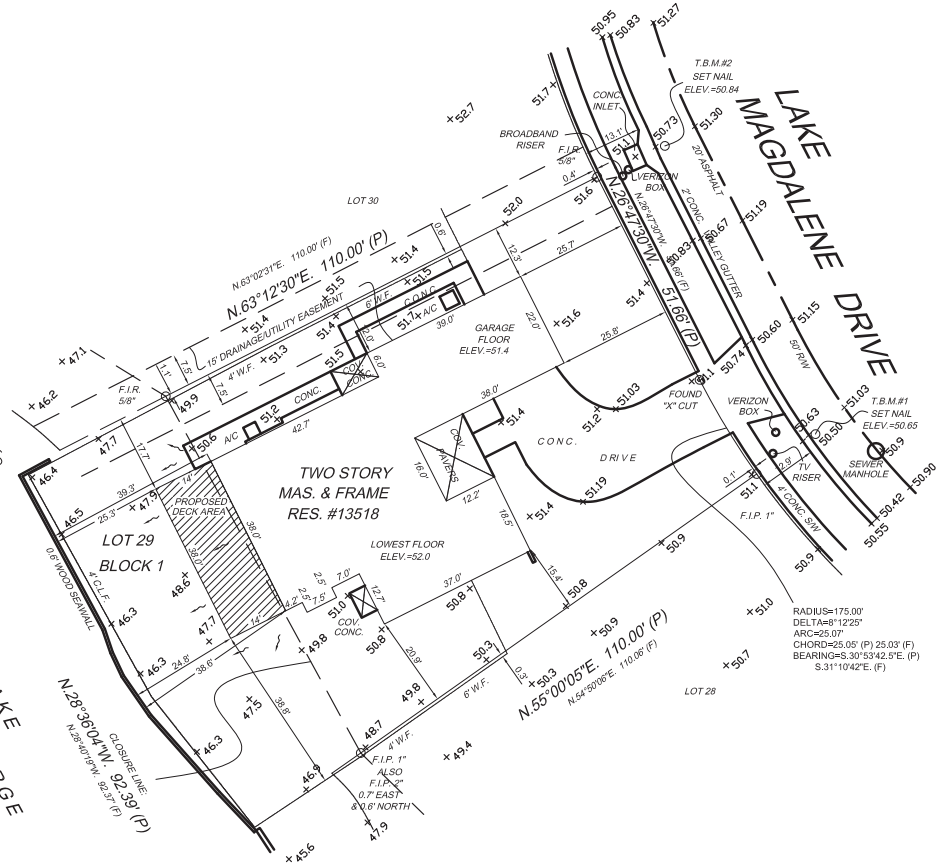

NORTH

SCALE : 1"= 20'

Legend

PC	:Point of Curvature	TBM	:Temporary Benchmark	CONC.	:Concrete
PT	:Point of Tangency	BM	:Benchmark	A.P.O.	:A Part Of
PRC	:Point of Reverse Curvature	PP	:Power/Utility Pole	COV.	:Covered
PCC	:Point of Compound Curvature	PSM	:Professional Surveyor & Mapper	MAS.	:Masonry
P.I.	:Point of Intersection	LB	:Licensed Business	RES.	:Residence
SIR	:Set Capped Iron Rod 1/2" #6962	RLS.	:Registered Land Surveyor	P.B.	:Plat Book
FIR	:Found Iron Rod	ATIMA	:As Their Interests May Appear	PG.	:Page
FIP	:Found Iron Pipe	ISAOA	:It's Successors And/Or Assigns	TYP.	:Typical
FCM	:Found Concrete Monument	R.C.P.	:Reinforced Concrete Pipe	W.F.	:Wood Fence
S.C.M.	:Set Concrete Monument	(P)	:Plat	EL.	:Elevation
SET DISK	:Set P-K Nail & Disk	(D)	:Deed	ASPH.	:Asphalt
FND DISK	:Found P-K Nail & Disk	(Desc)	:Description	W.C.	:Witness Corner
FND RRS	:Found Railroad Spike	(C)	:Calculation	R/W	:Right Of Way
NCF	:No Corner Found or Set	(F)	:Field Measured	ESMT.	:Easement
PRM	:Permanent Reference Monument	SEC.	:Section	S/W	:Sidewalk
O/H	:Overhead Wires	TWP.	:Township	C.B.	:Chord Bearing
C.L.F.	:Chain Link Fence	RGE	:Range	COL	:Column
P.O.B.	:Point of Beginning	C/L	:Centerline	SQ.	:Square
P.O.C.	:Point of Commencement	A/C	:Air Conditioner	DIA.	:Diameter
P-K	:Parker-Kalon	O/A	:Overall	U.S.	:United States
O.R.B.	:Official Records Book				
V.G.	:Concrete Valley Gutter				

ELEVATIONS ARE BASED ON S.W.F.W.M.D. BENCHMARK "19744 A", ELEVATION 49.29 (NAVD88).
BEARINGS ARE BASED ON THE SOUTHWESTERLY R/W LINE OF LAKE MAGDALENE DRIVE AS, "N.26°47'30"W.", PER PLAT.

Surveyor's Notes:

1) Property shown hereon appears to be located In Flood Zone "X" per F.I.R.M. No. 12057C 0205H Dated 8-28-08. This surveyor makes no guarantees as to the accuracy of the above information. Local F.E.M.A. agent should be contacted for verification.
2) No underground utilities, underground encroachments or building foundations were measured or located as part of this survey. Trees and shrubs were not located unless otherwise shown.
3) This survey was conducted without the benefit of an abstract of title, therefore there may be other easements, rights of way, setback lines, agreements, reservations, restrictions or other similar matters of public record, not shown hereon.
4) Unless otherwise noted, distances shown hereon refer to plat and field measurements and are measured in U.S. feet.

5) Re-use of this survey for purposes other than it was intended, without written verification, will be the re-users sole risk and without liability to the surveyor. Nothing herein shall be construed to convey any rights or benefits to anyone other than those to whom this survey was originally certified.

PLANS PREPARED BY:
LENA FINCH
(813)841-1241
REF JOB#: 42001

PIERRE M. VALLES
P.E.FL #66356
5470 E. BUSH BLVD, SUITE #202
TAMPA, FL 33612
PHONE: (813)506-1431

PLANS PREPARED FOR:
MIKE AND ADAIR MICHEAU
13518 LAKE MAGDALENE DR.
TAMPA, FL 33613

REVISIONS
1 3-30-2021

DRAWN BY: LENA
CHECKED BY: PHIL
DATE: 1/5/2021
SCALE: NOTED
JOB NO.: REAR DECK
SHEET NAME: SURVEY
SHEET: S1.0

< THIS PAGE WAS INTENTIONALLY LEFT BLANK >

< THIS PAGE WAS INTENTIONALLY LEFT BLANK >

Application Number: _____

VARIANCE REQUEST

1. Project Narrative: In the space below describe the variance including any history and/or related facts that may be helpful in understanding the request. This explanation shall also specifically identify what is being requested (*e.g. Variance of 10 feet from the required rear yard setback of 25 feet resulting in a rear yard of 15 feet)*. If additional space is needed, please attach extra pages to this application.

PLEASE REFER TO THE ATTACHED VARIANCE REQUEST.

2. A Variance is requested from the following Section(s) of the Hillsborough County Land Development Code:
LDC Section 4.01.07.B

ADDITIONAL INFORMATION

1. Have you been cited by Hillsborough County Code Enforcement? No ___X___ Yes _____
If yes, you must submit a copy of the Citation with this Application.

2. Do you have any other applications filed with Hillsborough County that are related to the subject property?
No ___X___Yes _____ If yes, please indicate the nature of the application and the case numbers assigned to the application(s):_____

3. Is this a request for a wetland setback variance? No _____ Yes ___X___
If yes, you must complete the *Wetland Setback Memorandum* and all required information must be included with this Application Packet (Attachment A).

4. Please indicate the existing or proposed utilities for the subject property:
Public Water ___X___ Public Wastewater ___X___ Private Well _____ Septic Tank_____

5. Is the variance to allow a third lot on well and/or septic or non-residential development with an intensity of three ERC's? No ___X___ Yes _____ If yes, you must submit a final determination of the *"Water, Wastewater, and/or Reclaimed Water – Service Application Conditional Approval – Reservation of Capacity"* prior to your public hearing (form may be obtained from **19th floor County Center**).

Application Number:_____

VARIANCE REQUEST

Project Narrative: In the space below describe the variance including any history and/or related facts that may be helpful in understanding the request. This explanation shall also specifically identify what is being requested (e.g., Variance of 10 feet from the required rear yard setback of 25 feet resulting in a rear yard of 15 feet). If additional space is needed, please attach extra pages to this application.

The applicant is requesting a variance to LDC Section 4.01.07.B to allow an of an existing composite deck patio into the 30-wetland conservation area setback as depicted on the site plan included with this application. The composite deck patio was approved 5/7/2021 and constructed under Hillsborough County Building Permit HC-BLD-21-0009849; however, the encroachment was not identified during the permit review because the application was not routed to the Hillsborough County Natural Resources Department for review.

The existing encroachments encompasses an area of 190 sq ft which is proposed to be mitigated by 260 sq ft of wetland plantings within the wetland setback area. If approved the applicant is seeking a permit for a screen enclosure around and within the perimeter of the patio as applied for under permit application number HC-BLD-21-0023848.

Application Number: _____

VARIANCE CRITERIA RESPONSES

1. Explain how the alleged hardships or practical difficulties are unique and singular to the subject property and are not those suffered in common with other property similarly located?

RESPONSE
The variance request is to LDC Sec. 4.01.07.B to allow an existing 190 sq ft encroachment into the wetland setback area which is being mitigated by a 260 sq ft of mitigation (wetland plantings). The alleged hardships or practical difficulties are unique and singular to the subject property in that the property owner permitted and constructed the existing deck under Hillsborough County Building Permit HC-BLD-21-0009849, a copy of which is included with this application; however, said application was not routed to the Hillsborough County Natural Resources Department for review. The construction of a county permitted structure within the wetland setback area is a unique and singular hardship to the subject property.

2. Describe how the literal requirements of the Land Development Code (LDC) would deprive you of rights commonly enjoyed by other properties in the same district and area under the terms of the LDC.

RESPONSE
The literal requirements of the Land Development Code (LDC) would deprive the owners of their rights by not allowing the property owners reasonable and full use of the of the deck that was constructed under Hillsborough County Building Permit HC-BLD-21-0009849. Conservation area setback encroachments are commonly granted in the same district and general area upon the providing of acceptable compensating mitigation areas and the granting of a variance.

3. Explain how the variance, if allowed, will not substantially interfere with or injure the rights of others whose property would be affected by allowance of the variance.

RESPONSE
The proposed 190 sq ft encroachment into the wetland conservation setback area is located at the rear of the property; therefore, the variance if allowed, will not substantially interfere with or injure the rights of others whose property would be affected by allowance of the variance as there is no impact on adjacent properties. Additionally, the encroachment already exists; therefore, no changes to the existing conditions are requested under this application.

Application Number: _____

4. Explain how the variance is in harmony with and serves the general intent and purpose of the LDC and the Comprehensive Plan (refer to Section 1.02.02 and 1.02.03 of the LDC for description of intent/purpose).

RESPONSE
The proposed variance to allow an 190 sq ft encroachment into the wetland conservation area setback will be in harmony with and serve the general intent and purpose of the LDC and the Comprehensive Plan as the LDC's stated intent sets forth requirements to foster and preserve public health, safety, comfort and welfare, and to aid in the harmonious, orderly, and progressive development of the unincorporated areas of Hillsborough County, which the resulting site's development with the requested variance and required compensating mitigation area will achieve.

5. Explain how the situation sought to be relieved by the variance does not result from an illegal act or result from the actions of the applicant, resulting in a self-imposed hardship.

RESPONSE
The deck that encroaches into the wetland setback area was constructed under Permit HC-BLD-21-0009849 that was issued by the Hillsborough County Building Department.

6. Explain how allowing the variance will result in substantial justice being done, considering both the public benefits intended to be secured by the LDC and the individual hardships that will be suffered by a failure to grant a variance.

RESPONSE
Granting the variance is in accordance with the character and existing land uses in the neighborhood.

INSTR # 2005149509
O BK 14879 PG 1223
Pg 1223; (1pg)
RECORDED 04/13/2005 03:17:55 PM
CLERK OF COURT
HILLSBOROUGH COUNTY
DOC TAX PD(F.S.201.02) 0.70
DEPUTY CLERK F Tecer

General Warranty Deed

Deed Date: April 5, 2005, between

Grantors: Michael D. Micheau and Gloria Adair Micheau, husband and wife
13518 Lake Magdalene Dr., Tampa, FL 33613, and

Grantees : Gloria A. Micheau and Michael D. Micheau, Trustees of the Micheau Revocable Trust, dtd 4/ 5/2005
13518 Lake Magdalene Dr., Tampa, FL 33613

The Grantors reserve for their lifetime all present possessory rights and beneficial interest in the real property conveyed by this deed. The Grantees, as Trustees, have full power and authority to protect, conserve, sell, lease, improve, gift, convey either with or without consideration, mortgage, pledge, or otherwise encumber said property and to manage and dispose of the real property or any portions thereof described herein.

WITNESSETH, that said Grantors, for and in consideration of the sum of Ten Dollars and other valuable consideration paid by the Grantees to the Grantors, the receipt and sufficiency of which is acknowledged, have granted, bargained, sold, and conveyed unto the Grantees and the Grantees' heirs, successors, and assigns forever, with covenants of general warranty of title, all that certain parcel of land in the County of Hillsborough and State of Florida, to wit:

Lot 29, in Block 1, of LAKE MAGDALENE ARMS ESTATES, SECTION ONE, as per map or plat thereof, as recorded in Plat Book 45, Page 40, of the Public Records of Hillsborough County, Florida;

and being that same property conveyed to the Grantors herein by deed dated February 10, 1992, from Doreen G. Holliman, a single woman, and of record in the Circuit Court Clerk's Office of Hillsborough County, Florida, in Official Record Book 6517, page 0047.

Property Appraiser's Folio No. 018845.1058

TOGETHER with: all property of a permanent or fixed nature attached to the land such as houses, buildings and structures; and all rights attached to the land such as easements, rents, profits and covenants, whether such rights are benefits or burdens.

AND the Grantors do hereby fully warrant the title to said land and will defend the same against the lawful claims of all persons whomsoever, except for taxes accruing after December 31, 2004, and restrictions, easements, and encumbrances of record, if any.

SIGNED, sealed and delivered in the presence of:

Lorie Schaefer Cura, Witness

Michael D. Micheau (SEAL)
13518 Lake Magdalene Dr., Tampa, FL 33613

Sharon Scarinci, Witness

Gloria Adair. Micheau (SEAL)
13518 Lake Magdalene Dr., Tampa, FL 33613

STATE OF FLORIDA
County of Hillsborough

The foregoing instrument was acknowledged before me April 5, 2005, by Michael D. Micheau and Gloria Adair Micheau, who are personally known to me.

Prepared by and please return to:
Harold L. Harkins, Jr., Esq.
2803 Busch Blvd.W, Suite 112
P. O. Box 274121
Tampa, FL 33688-4121
813-933-7144

Lorie Schaefer Cura
Notary Public - State of Florida

Lorie Schaefer Cura
MY COMMISSION # DD077853 EXPIRES
December 10, 2005
BONDED THRU TROY FAIN INSURANCE, INC.

22-0737

Hillsborough County
Florida

VARIANCE APPLICATION

Received
03/28/2022
Development Services

IMPORTANT INSTRUCTIONS TO ALL APPLICANTS:
*You must schedule an appointment to submit this application by calling **813-272-5600.***
*All requirements listed on the submittal checklist must be met. **Incomplete applications will not be accepted.***

Property Information

Address: 13518 LAKE MAGDALENE DR City/State/Zip: TAMPA, FL 33613 TWN-RN-SEC: 03-28-18

Folio(s): 18845.1058 Zoning: PD Future Land Use: R-9 Property Size: 0.25 AC

Property Owner Information

Name: MICHAEL D AND GLORIA A MICHEAU/TRUSTEES Daytime Phone: 813-579-7922

Address: 13518 LAKE MAGDALENE DR City/State/Zip: TAMPA, FL 33613

Email: mmicheauhydro@gmail.com FAX Number:

Applicant Information

Name: DAVID WRIGHT / TSP COMPANIES, INC. Daytime Phone: 813-230-7473

Address: PO BOX 273471 City/State/Zip: TAMPA, FL 33688

Email: david@tspco.net FAX Number:

Applicant's Representative (if different than above)

Name: Daytime Phone:

Address: City / State/Zip:

Email: FAX Number:

I HEREBY S WEAR OR AFFIRM THAT AL L THE INFORMATION PROVIDED IN THIS APP LICATION PACKET IS TRU E AND ACCURATE, TO THE BEST OF M Y KNOWLEDGE, AND AUTHORIZE THE REPRESENTATIVE LISTED ABOVE TO ACT ON MY BEHALF FOR THIS APPLICATION.

Signature of Applicant

DAVID WRIGHT
Type or Print Name

I HEREBY AUTHORIZE THE PROCESSING OF THIS APPLICATION AND RECOGNIZE THAT THE F INAL ACTION ON THIS P ETITION SHALL BE BI NDING TO THE PROPERTY AS WELL AS TO CURRENT AND ANY FUTURE OWNERS.

Signature of Property Owner

MICHAEL MICHEAU GLORIA MICHEAU
Type or Print Name

Office Use Only

Intake Staff Signature: Ana Lizardo Intake Date: 03/28/2022

Case Number: 22-0737 Public Hearing Date: 05/23/2022

Receipt Number: 145101

PARCEL INFORMATION HILLSBOROUGH COUNTY FLORIDA

Jurisdiction	Unincorporated County
Zoning Category	Planned Development
Zoning	PD
Description	Planned Development
RZ	71-0236
Flood Zone:X	AREA OF MINIMAL FLOOD HAZARD
FIRM Panel	0205H
FIRM Panel	12057C0205H
Suffix	H
Effective Date	Thu Aug 28 2008
Pre 2008 Flood Zone	X
Pre 2008 Flood Zone	A
Pre 2008 Firm Panel	1201120205D
County Wide Planning Area	Greater Carrollwood Northdale
Community Base Planning Area	Greater Carrollwood Northdale
Planned Development	PD
Re-zoning	null
Personal Appearances	91-0061 WD,91-0079 DENIED
Census Data	Tract: 011203 Block: 2015
Future Landuse	R-9
Urban Service Area	TSA
Waste Water Interlocal	City of Tampa Waste Water
Water Interlocal	City of Tampa Water
Mobility Assessment District	Urban
Mobility Benefit District	1
Fire Impact Fee	Northwest
Parks/Schools Impact Fee	NORTHEAST
ROW/Transportation Impact Fee	ZONE 1
Wind Borne Debris Area	140 MPH Area
Competitive Sites	NO
Redevelopment Area	NO

Folio: 18845.1058

March 28, 2022

1:2,657

0 0.02 0.04 0.09 mi

0 0.04 0.07 0.14 km

RS, Hillsborough County - Public Works - Geomatics - Streets & Addresses

Hillsborough County Florida

Folio: 18845.1058
PIN: U-03-28-18-0U7-000001-00029.0
MICHAEL D AND GLORIA A MICHEAU/TRUSTEES
Mailing Address:
13518 LAKE MAGDALENE DR
TAMPA, FL 33613-4130
Site Address:
13518 LAKE MAGDALENE DR
TAMPA, Fl 33613
SEC-TWN-RNG: 03-28-18
Acreage: 0.25751701
Market Value: $464,123.00
Landuse Code: 0100 SINGLE FAMILY

Hillsborough County makes no warranty, representation or guaranty as to the content, sequence, accuracy, timeliness, or completeness of any of the geodata information provided herein. The reader should not rely on the data provided herein for any reason. Hillsborough County explicitly disclaims any representations and warranties, including, without limitations, the implied warranties of merchantability and fitness for a particular purpose. Hillsborough County shall assume no liability for:
1. Any error, omissions, or inaccuracies in the information provided regardless of how caused.
Or
2. Any decision made or action taken or not taken by any person in reliance upon any information or data furnished hereunder.

22-0737

< THIS PAGE WAS INTENTIONALLY LEFT BLANK >

< THIS PAGE WAS INTENTIONALLY LEFT BLANK >